VENS0750 + VTC750E:
ENSUITE - FLOOR MOUNTED VANITY COMBO 750MM

VENS0750: 730mm (L) x 360mm (W) x 890mm (H)

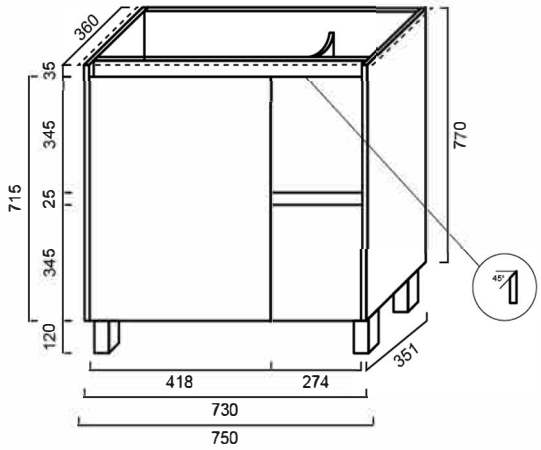

Optional Kickboard

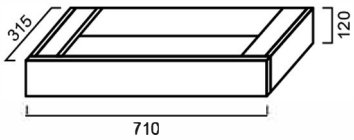

DIMENSIONS

Cabinet Only: Length: 730mm | Width: 360mm | Height: 770mm (890mm with kickboard or legs)
Cabinet & Ceramic Top: 750mm | Width: 370mm | Height: 910mm (+/- 5mm tolerance)

DESCRIPTION

- The Ensuite is a contemporary, floor mounted bathroom vanity and ceramic top combo.
- The cabinet is constructed from high moisture resistant (HMR boards) which reduce the risk of mould and bacteria. Vanity top is made from vitreous china ceramic.
- The vanity surface is completed with a 2 Pac polyurethane finish which makes it resistant to conditions normally found in bathrooms such as heat, moisture and stains, but also marring and chipping to the vanity surface. This guarantees that the vanity will continue to look great long after purchase.
- Conforms to the lowest formaldehyde percentage ratings (up to the highest Australian and International environmental and health standards).
- Designed to guarantee product longevity through its solid construction. Every drawer has solid 16mm panels and backing and are screwed double front.
- Installed with DTC runners and hinges, manufactured from high grade materials, and incorporates soft close technology, reducing wear and tear and increasing the lifespan of the vanity.
- No handles creates an elegant and sleek design.

Tap Holes: *1*
Mounting: *Legs or Kickboard*
Number of Bowls: *Single*

Bowl Style: *Square*
Overflow: *Yes*

WARRANTY

1 Year Product Replacement Warranty

- Product replacement does not include installation or removal of the original product
- Check product for damage before installation - installing a damaged product voids warranty

IMPORTANT NOTICE

- All pictures and drawings on this brochure are representational only, changes in the product may have occurred since time of print.
- All prices on this brochure and The Sink Warehouse website are subject to change without notice.

To contact The Sink Warehouse email us at info@sinkwarehouse.com.au